skypine

MODEL NO:
SD-971S

DESCRIPTION:
Main Board

SHEET NUMBER:
1 OF 11

SCH REVISION:
VER:02

PCB REVISION:
VER:02

CODE NO:
D-2931-0001-02-00

Designed

Checked 1

Checked 2

Approved

DATED: 3/5/2007

SD-971S/SD-9510-S

MAIN BOARD DESIGN

Ver:02

MODEL NO: SD-971S

DESCRIPTION: Main Board

SHEET NUMBER: 2 OF 11

SCH REVISION: VER:02

PCB REVISION: VER:02

CODE NO: D-2931-0001-02-00

Designed

Checked 1

Checked 2

Approved

DATED: 3/5/2007

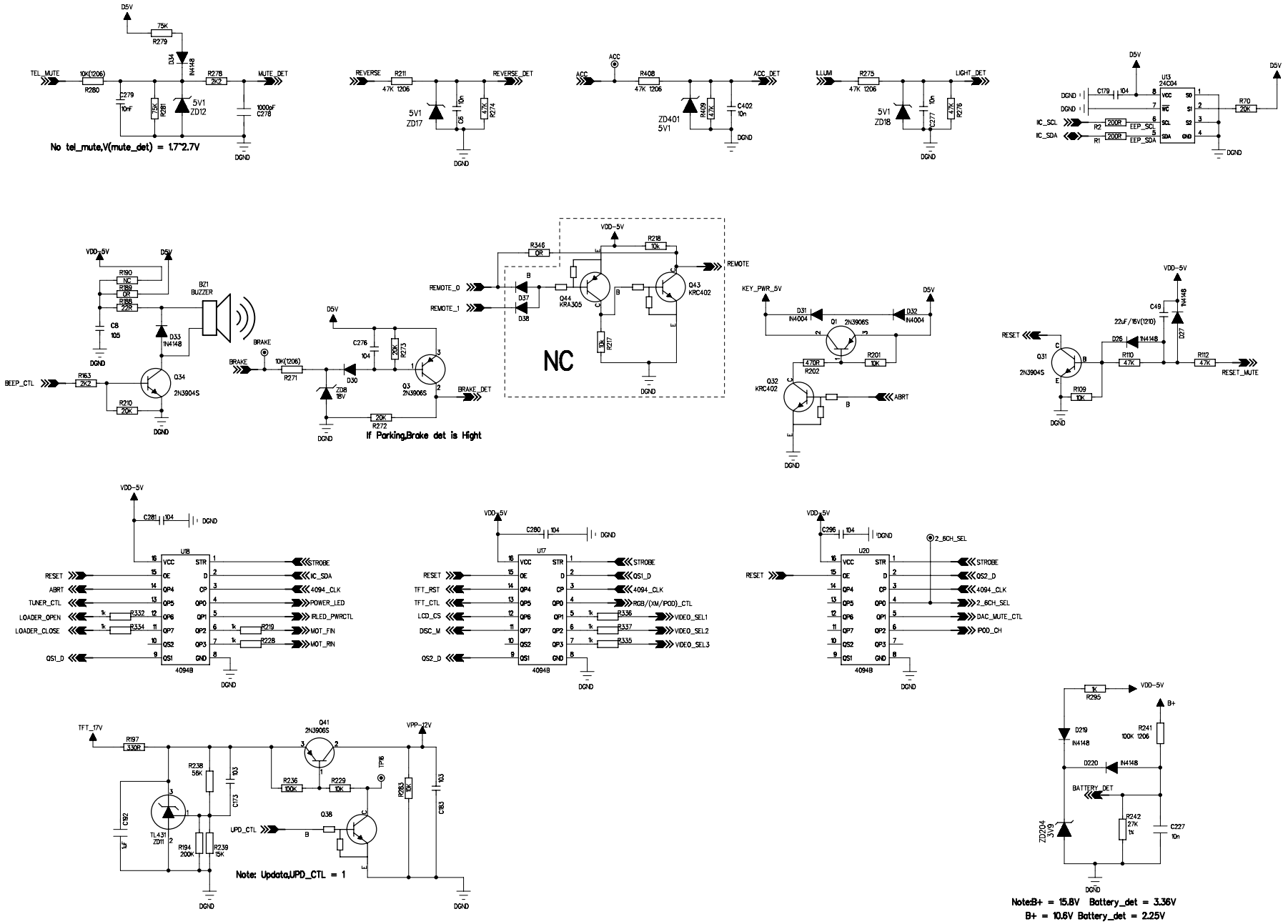

MODEL NO: SD-971S

DESCRIPTION: Main Board

SHEET NUMBER: 3 OF 11

SCH REVISION: VER:02

PCB REVISION: VER:02

CODE NO: D-2931-0001-02-00

Designed

Checked 1

Checked 2

Approved

DATED: 3/5/2007

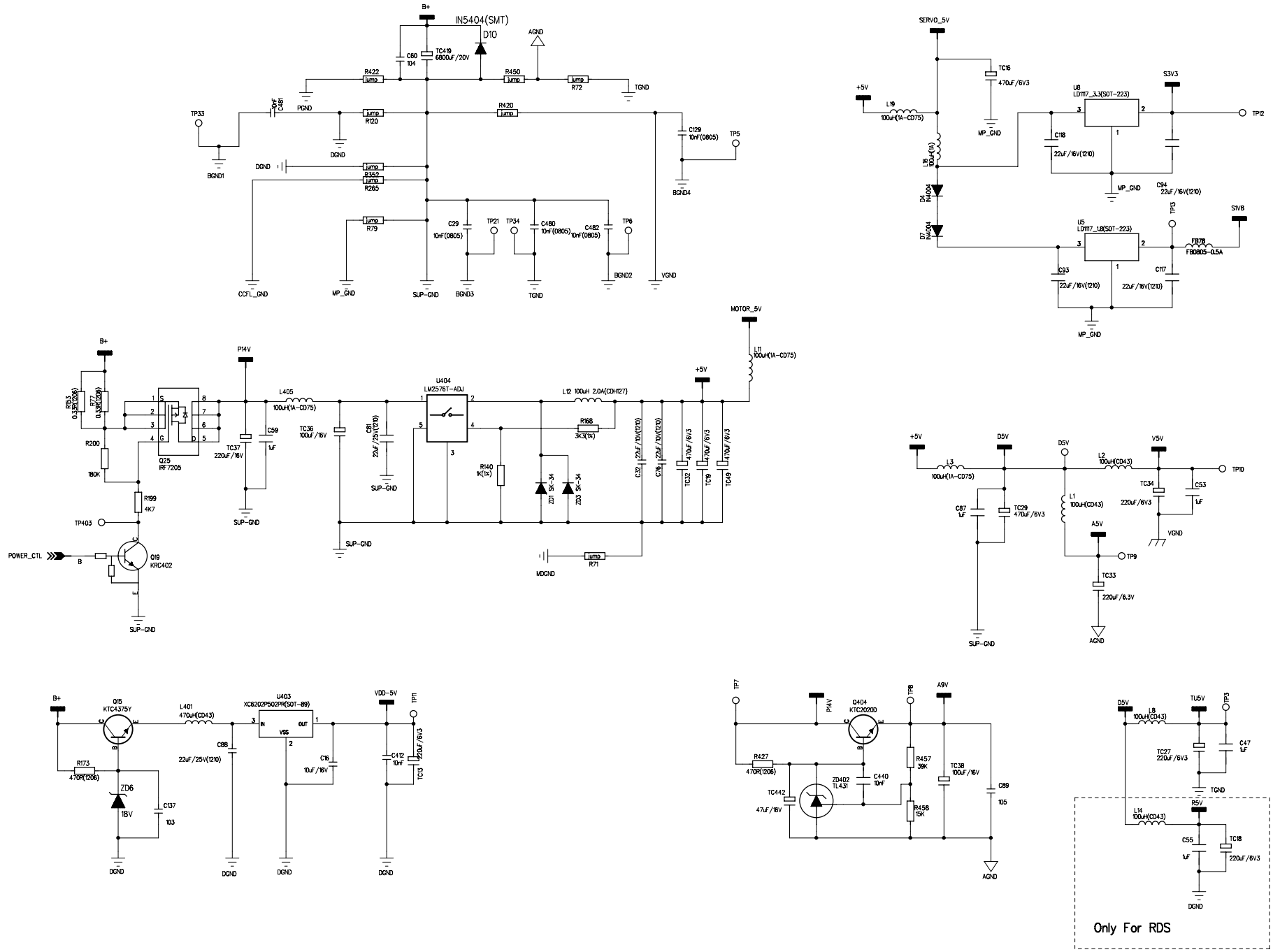

skypine

MODEL NO: SD-971S

DESCRIPTION: Main Board

SHEET NUMBER: 4 OF 11

SCH REVISION: VER:02

PCB REVISION: VER:02

CODE NO: D-2931-0001-02-00

Designed

Checked 1

Checked 2

Approved

DATED: 3/5/2007

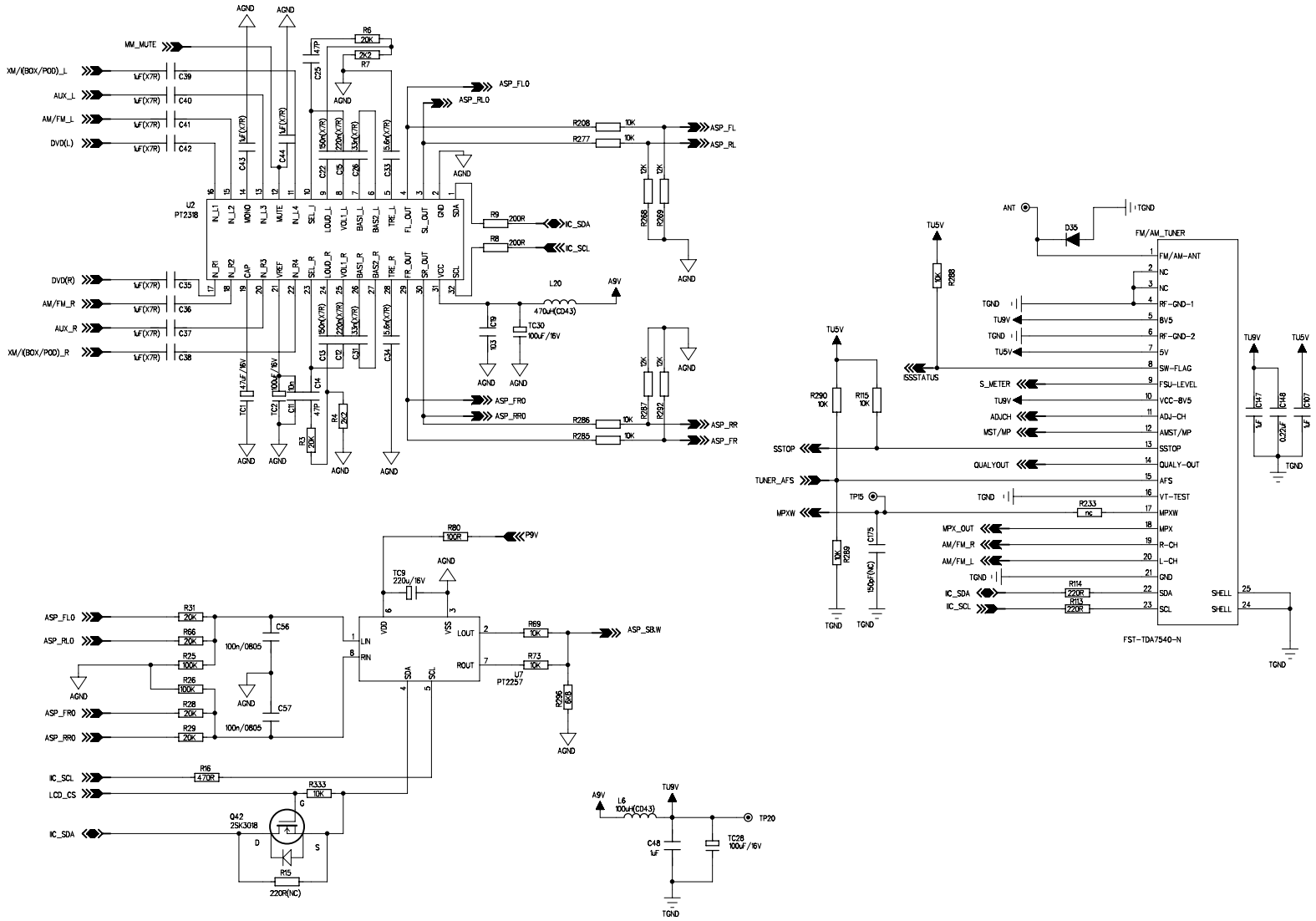

skypine

MODEL NO:
SD-971S

DESCRIPTION:
Main Board

SHEET NUMBER:
5 OF 11

SCH REVISION:
VER:02

PCB REVISION:
VER:02

CODE NO:
D-2931-0001-02-00

Designed

Checked 1

Checked 2

Approved

DATED: 3/5/2007

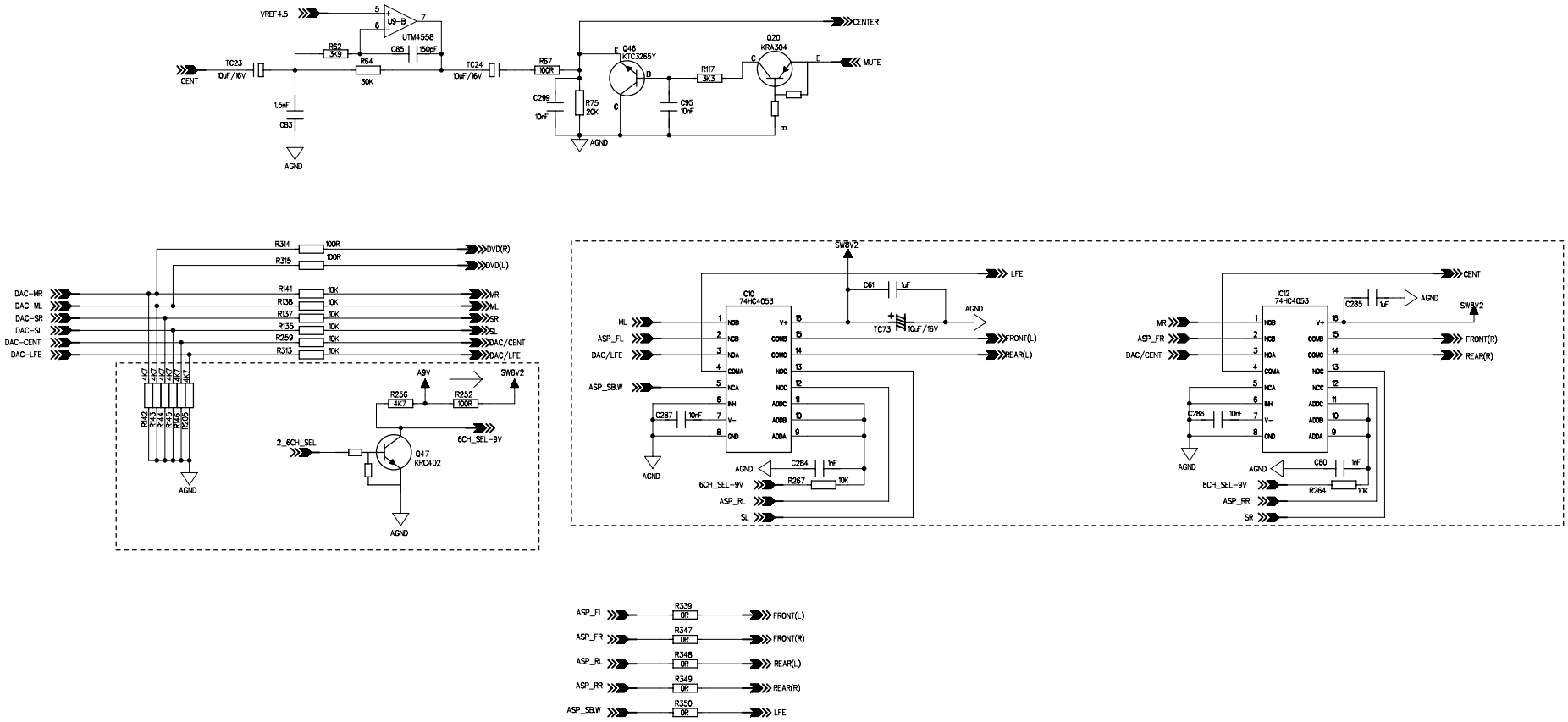

MODEL NO: SD-971S

DESCRIPTION: Main Board

SHEET NUMBER: 6 OF 11

SCH REVISION: VER:02

PCB REVISION: VER:02

CODE NO: D-2931-0001-02-00

Designed

Checked 1

Checked 2

Approved

DATED: 3/5/2007

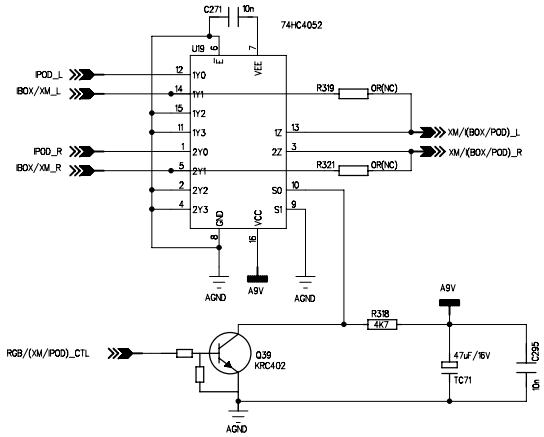

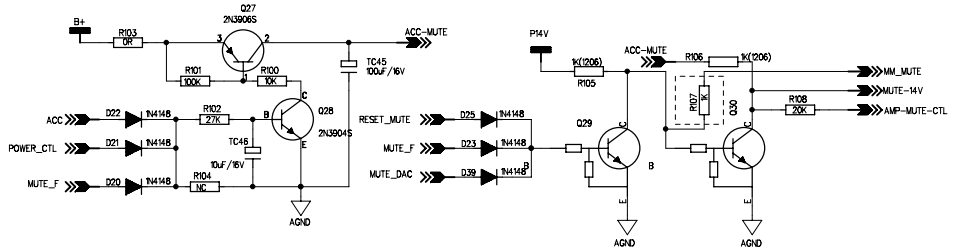

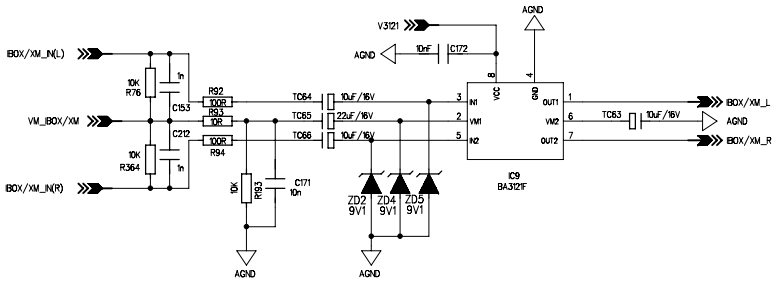

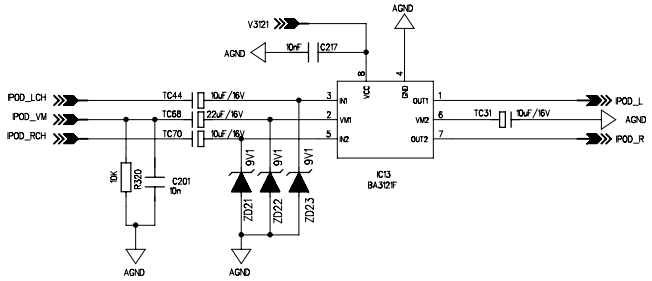

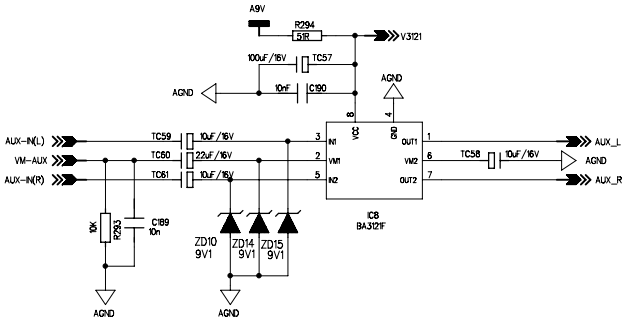

skypine

MODEL NO: SD-971S

DESCRIPTION: Main Board

SHEET NUMBER: 7 OF 11

SCH REVISION: VER:02

PCB REVISION: VER:02

CODE NO: D-2931-0001-02-00

Designed

Checked 1

Checked 2

Approved

DATED: 3/5/2007

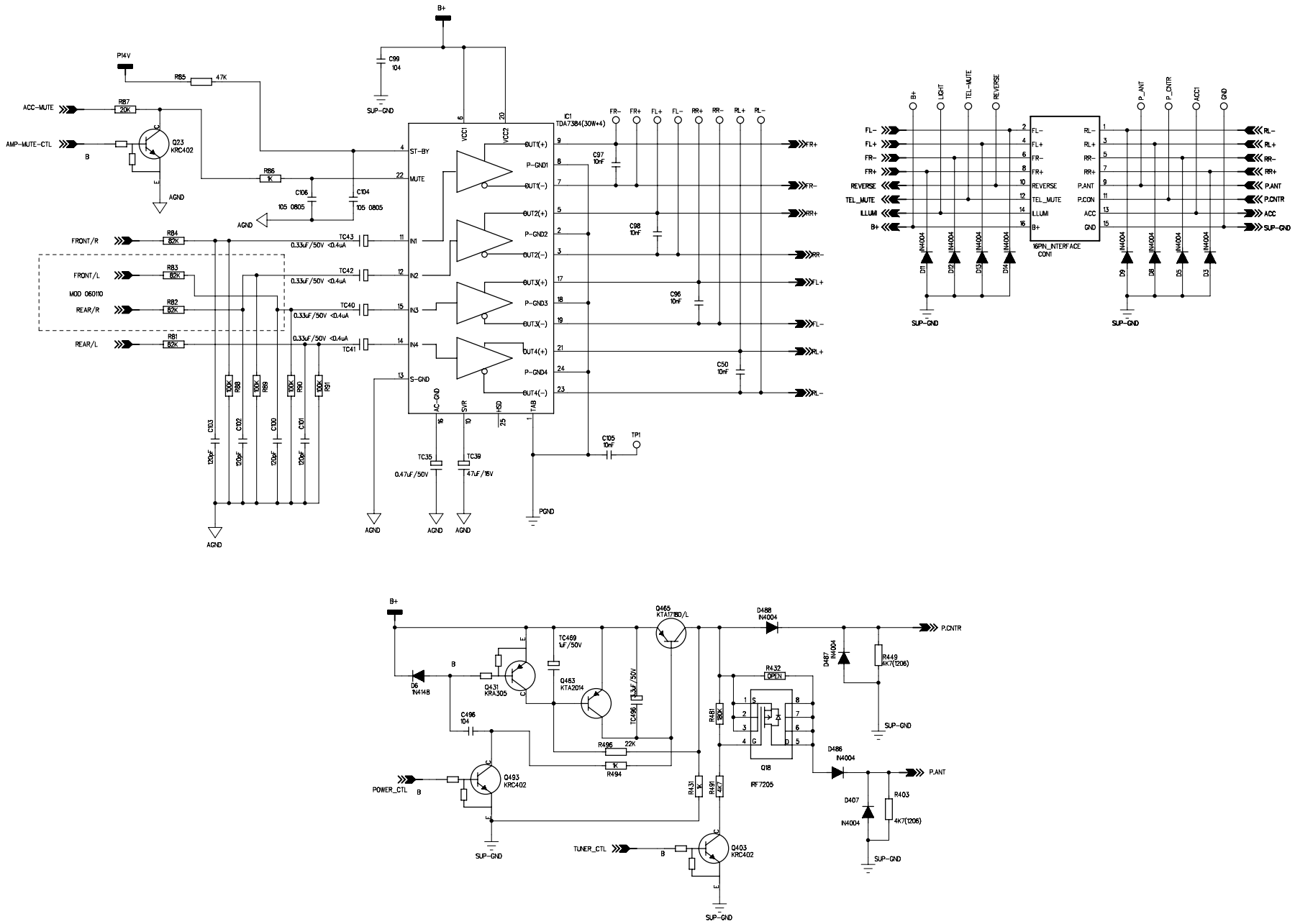

skypine

MODEL NO:
SD-971S

DESCRIPTION:
Main Board

SHEET NUMBER:
8 OF 11

SCH REVISION:
VER:02

PCB REVISION:
VER:02

CODE NO:
D-2931-0001-02-00

Designed

Checked 1

Checked 2

Approved

DATED: 3/5/2007

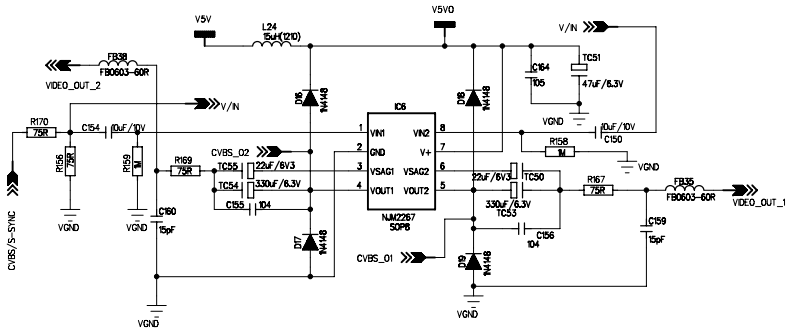

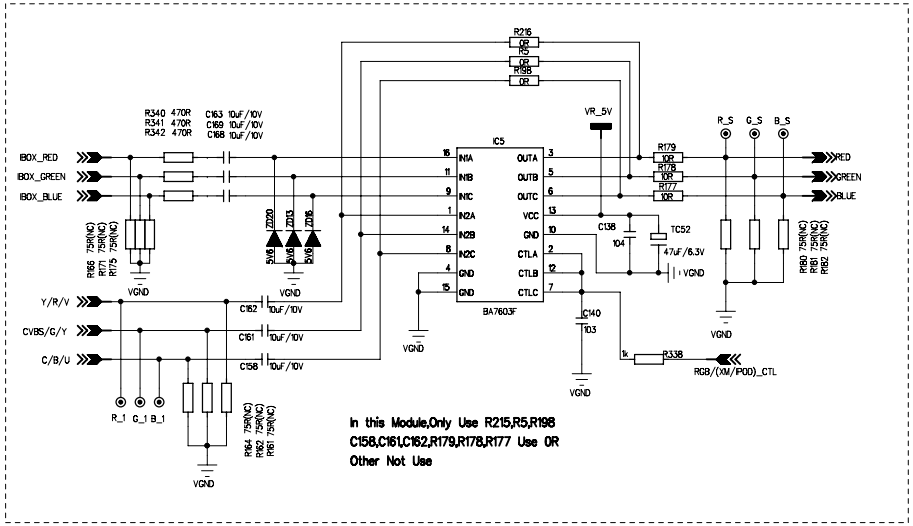

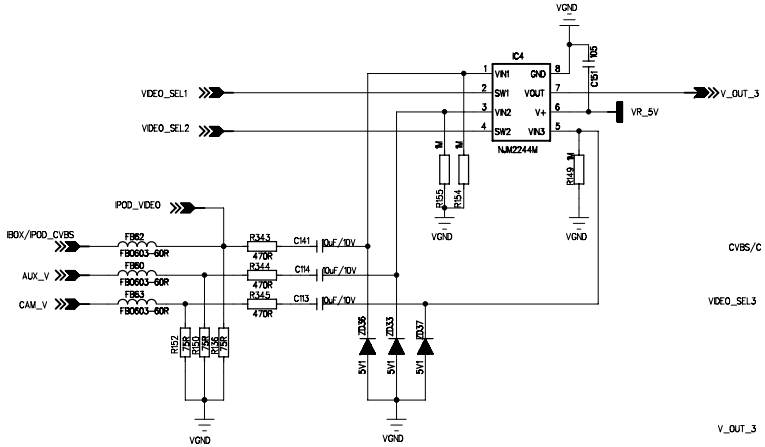

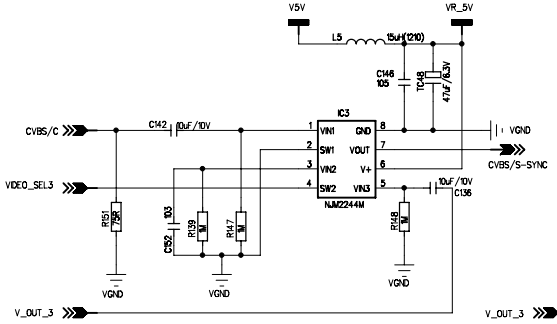

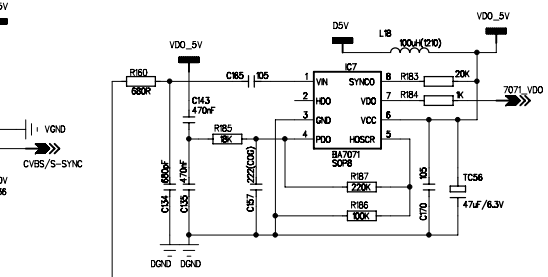

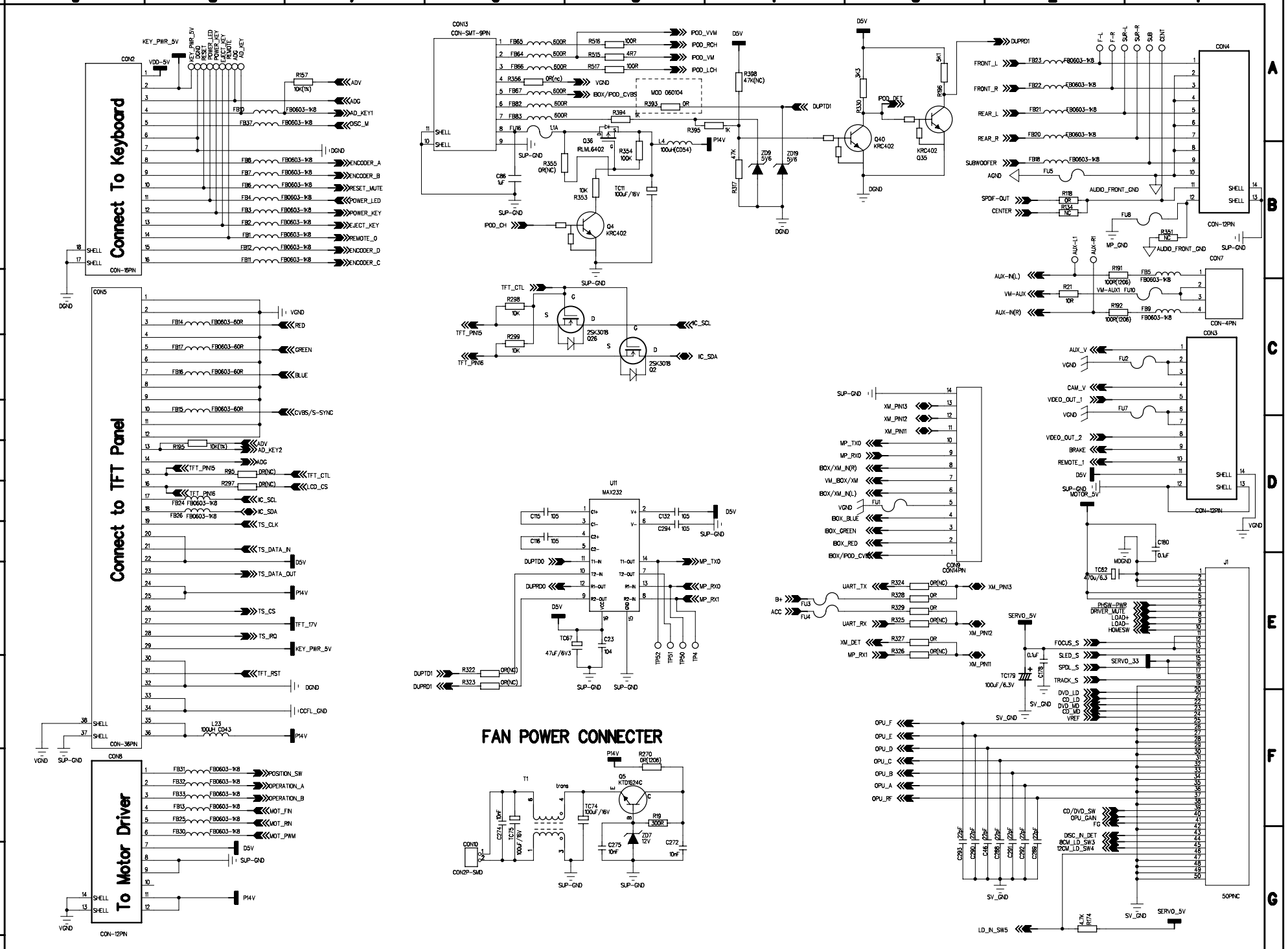
Connect To Keyboard
Connect to TFT Panel
To Motor Driver
FAN POWER CONNECTER
CON13
CON-SMT-9PIN
CON4
CON-12PIN
CON7
CON-4PIN
CON3
CON-12PIN
CON2
CON-16PIN
CON5
CON-36PIN
CON8
CON-12PIN
CON9
CON14PIN
J1
50PINC
U11
MAX232
Q40
KRC402
Q4
KRC402
Q5
KTD1524C
T1
trans
CON10
CON2P-SMD
2SK301B
Q26
2SK301B
Q2
MODEL NO:
SD-971S
DESCRIPTION:
Main Board
SHEET NUMBER:
9 OF 11
SCH REVISION:
VER:02
PCB REVISION:
VER:02
CODE NO:
D-2931-0001-02-00
Designed
Checked 1
Checked 2
Approved
DATED: 3/5/2007

MODEL NO:
SD-971S

DESCRIPTION:
Main Board

SHEET NUMBER:
10 OF 11

SCH REVISION:
VER:02

PCB REVISION:
VER:02

CODE NO:
D-2931-0001-02-00

Designed

Checked 1

Checked 2

Approved

DATED: 3/5/2007

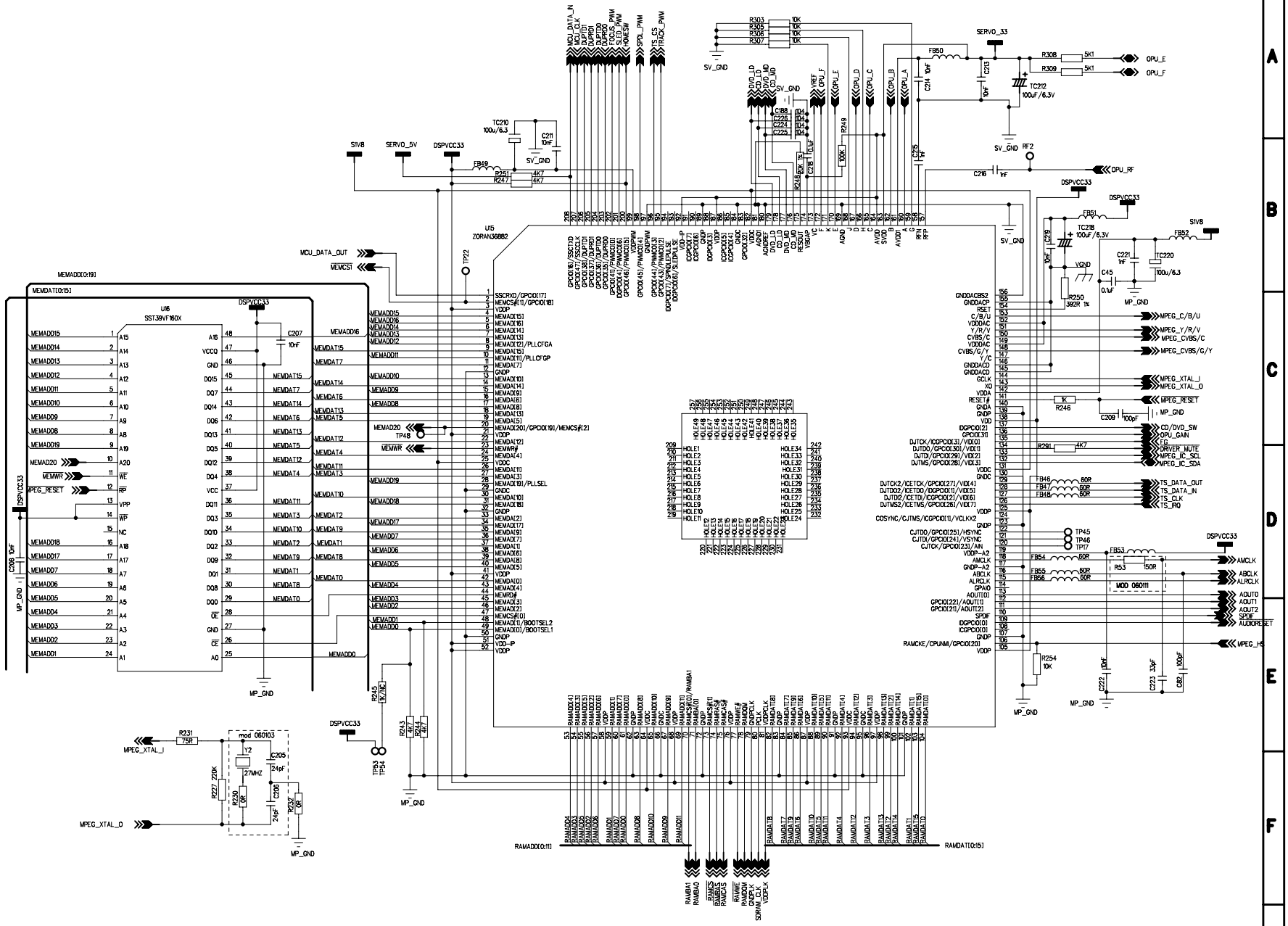

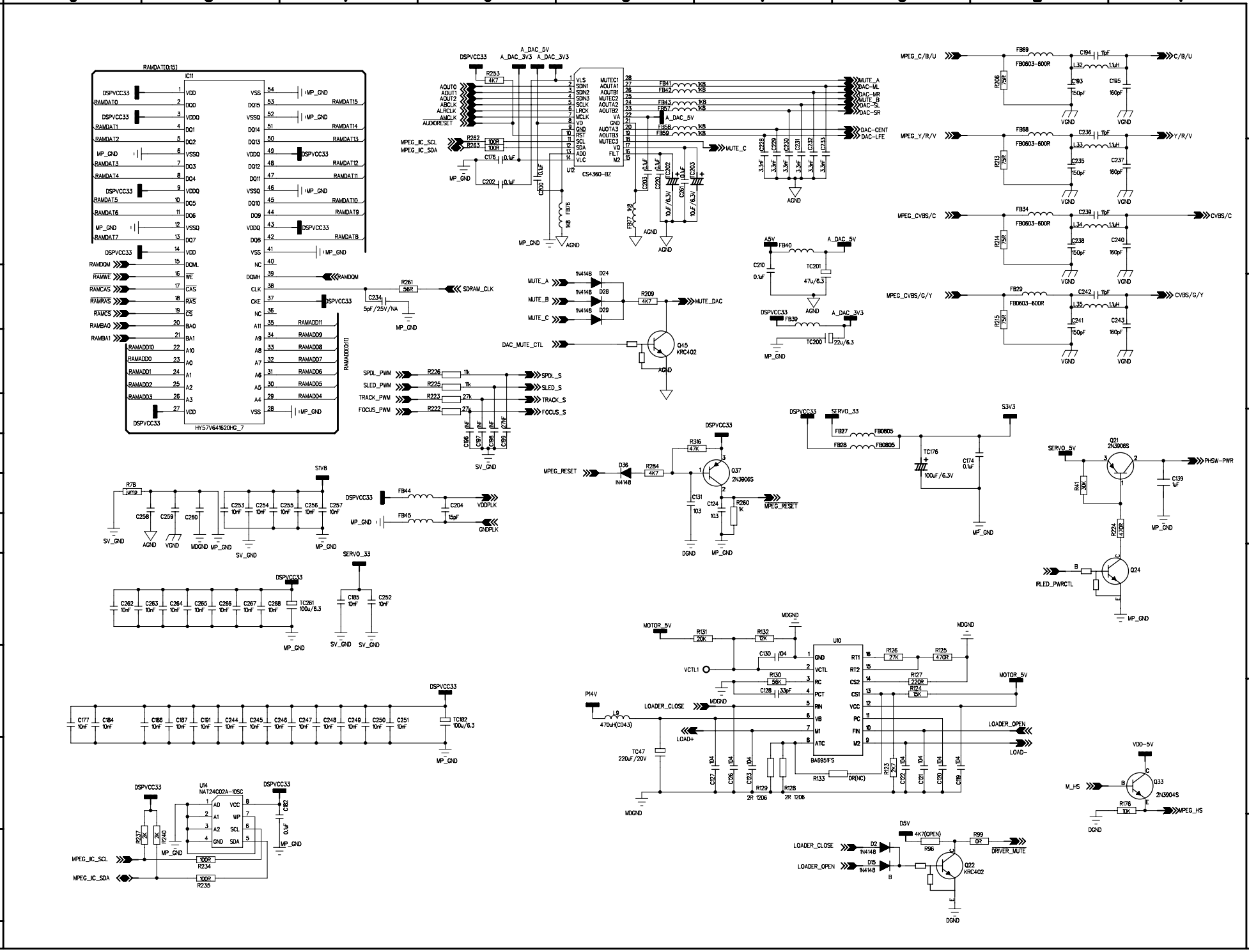
skypine
MODEL NO:
SD-971S
DESCRIPTION:
Main Board
SHEET NUMBER:
11 OF 11
SCH REVISION:
VER:02
PCB REVISION:
VER:02
CODE NO:
D-2931-0001-02-00
Designed
Checked 1
Checked 2
Approved
DATED: 3/5/2007
IC11
HY57V641620HG_7
U12
CS4360-BZ
U10
BA6951FS
U14
NAT24C02A-10SC
Q45
KRC402
Q37
2N3906S
Q21
2N3906S
Q24
Q33
2N3904S
Q22
KRC402
MPEG_C/B/U
MPEG_Y/R/V
MPEG_CVBS/C
MPEG_CVBS/G/Y
C/B/U
Y/R/V
CVBS/C
CVBS/G/Y
SDRAM_CLK
MUTE_DAC
DAC_MUTE_CTL
SPDL_PWM
SLED_PWM
TRACK_PWM
FOCUS_PWM
SPDL_S
SLED_S
TRACK_S
FOCUS_S
MPEG_RESET
PHSW-PWR
IRLED_PWRCTL
LOADER_CLOSE
LOADER_OPEN
LOAD+
LOAD-
DRIVER_MUTE
MPEG_HS
MPEG_IC_SCL
MPEG_IC_SDA
VDDPLK
GNDPLK

0	9	8	7	6	5	4	3	2	1

skypine

MODEL NO:
SD-971S

DESCRIPTION:
TFT DRIVER

SHEET NUMBER:
1 OF 3

SCH REVISION:
V02

PCB REVISION:
V02

CODE NO:
D-2971-0001-02-00

Designed

Checked 1

Checked 2

Approved

DATED: 2006.05.26

SD-971S/SD-9510-S

TFT BOARD

Version:02

2006.07.05

A B C D E F G

0	9	8	7	6	5	4	3	2	1

skypine

MODEL NO:
SD-971S

DESCRIPTION:
TFT DRIVER

SHEET NUMBER:
2 OF 3

SCH REVISION:
V02

PCB REVISION:
V02

CODE NO:
D-2971-0001-02-00

Designed

Checked 1

Checked 2

Approved

DATED: 2006-07-05

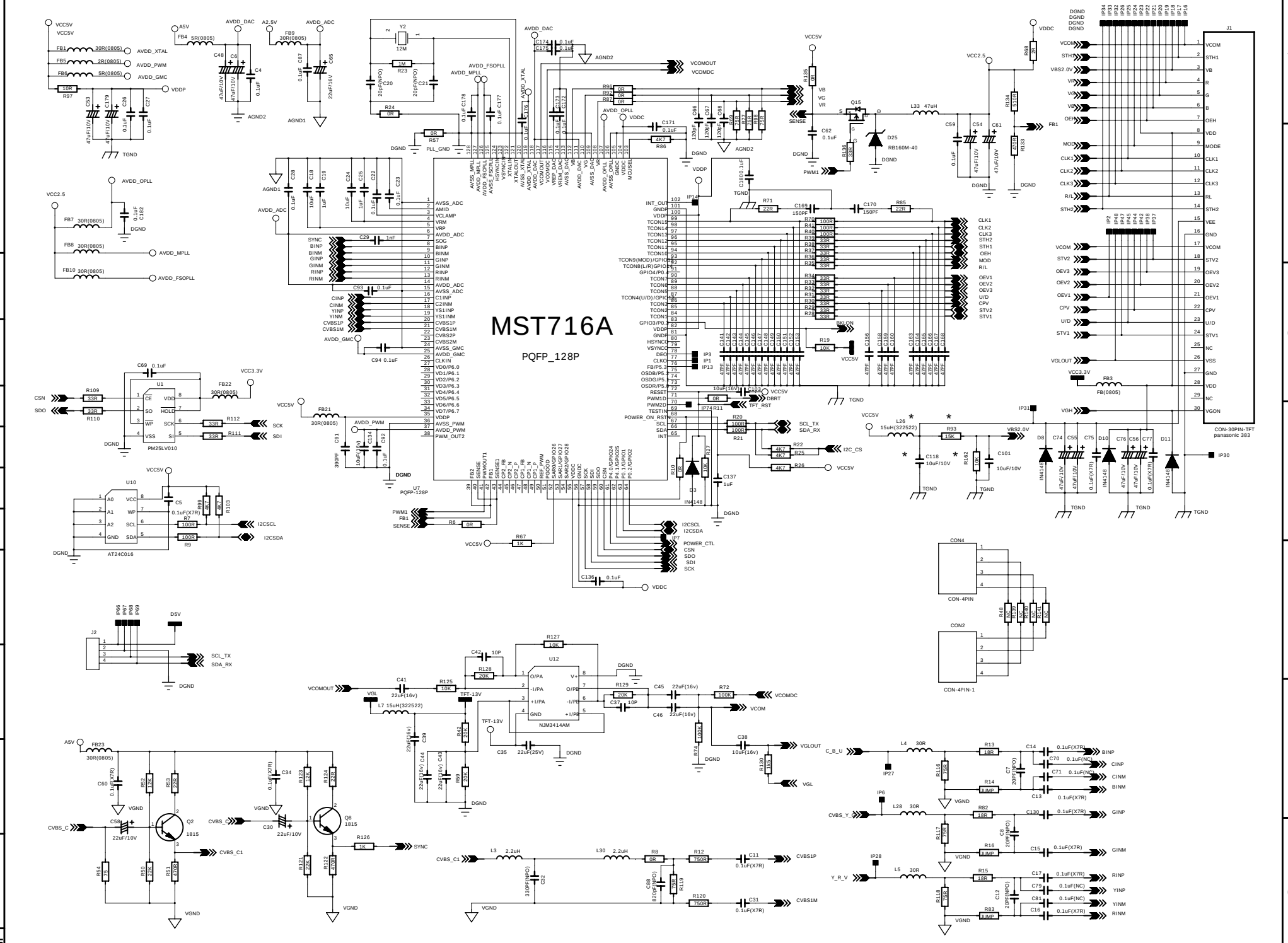

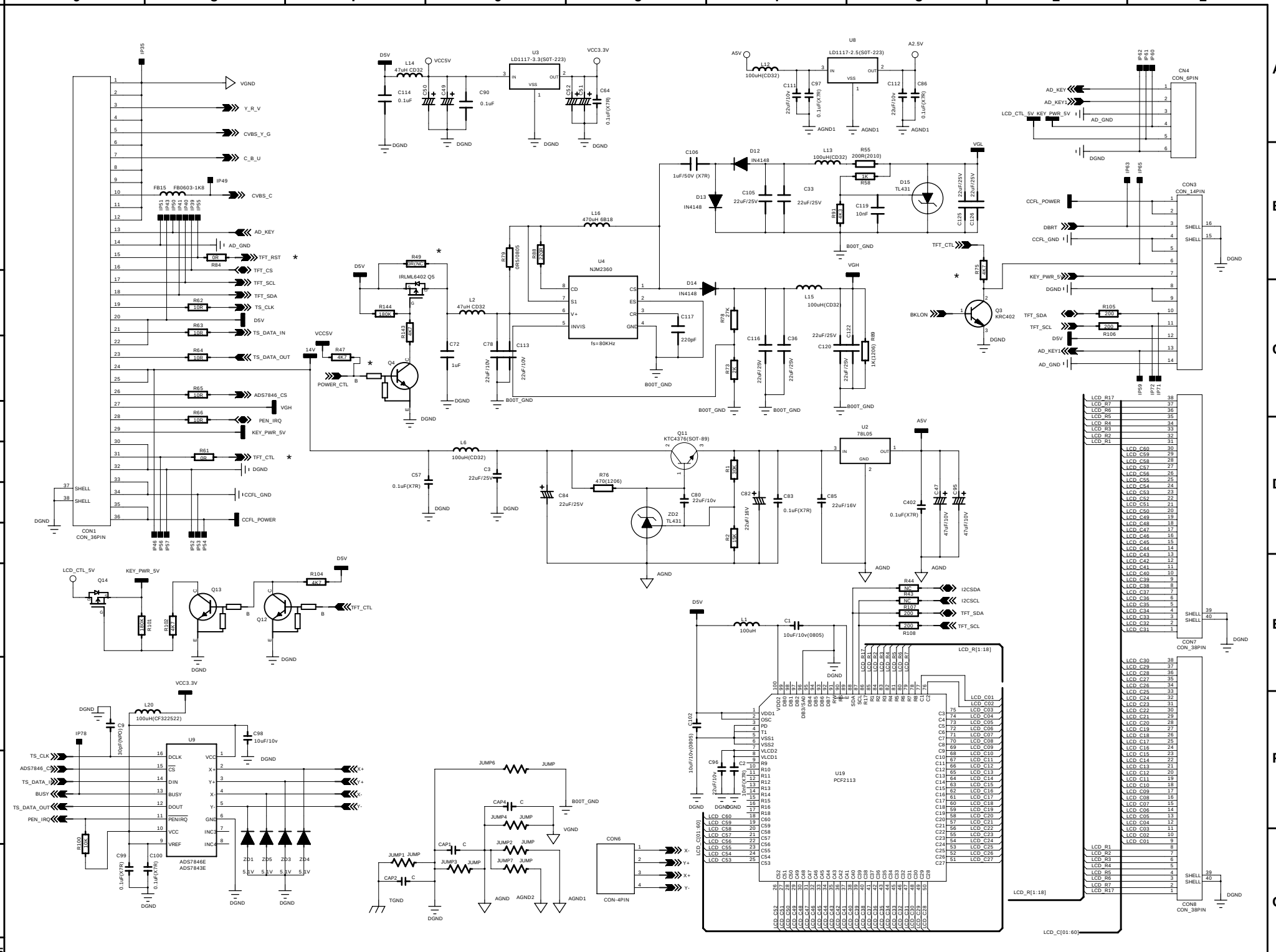
0
9
8
7
6
5
4
3
2
1
A
B
C
D
E
F
G
skypine
MODEL NO:
SD-971S
DESCRIPTION:
TFT DRIVER
SHEET NUMBER:
3 OF 3
SCH REVISION:
V02
PCB REVISION:
V02
CODE NO:
D-2971-0001-02-00
Designed
Checked 1
Checked 2
Approved
DATED: 2006-07-05
CON1
CON_36PIN
CN4
CON_6PIN
CON3
CON_14PIN
CON7
CON_38PIN
CON8
CON_38PIN
U3
LD1117-3.3(S0T-223)
U8
LD1117-2.5(S0T-223)
U4
NJM2360
fs=80KHz
U2
78L05
U9
ADS7846E
ADS7843E
U19
PCF2113
CON6
CON-4PIN
VCC5V
VCC3.3V
A5V
A2.5V
VGL
VGH
DGND
AGND
AGND1
AGND2
B00T_GND
TGND
VGND
Y_R_V
CVBS_Y_G
C_B_U
CVBS_C
AD_KEY
AD_GND
TFT_RST
TFT_CS
TFT_SCL
TFT_SDA
TS_CLK
TS_DATA_IN
TS_DATA_OUT
ADS7846_CS
PEN_IRQ
KEY_PWR_5V
TFT_CTL
CCFL_GND
CCFL_POWER
DBRT
BKLON
POWER_CTL
LCD_CTL_5V
I2CSDA
I2CSCL
LCD_R[1:18]
LCD_C[01:60]